THE URBAN ELECTRIC Co.

BUBBLE

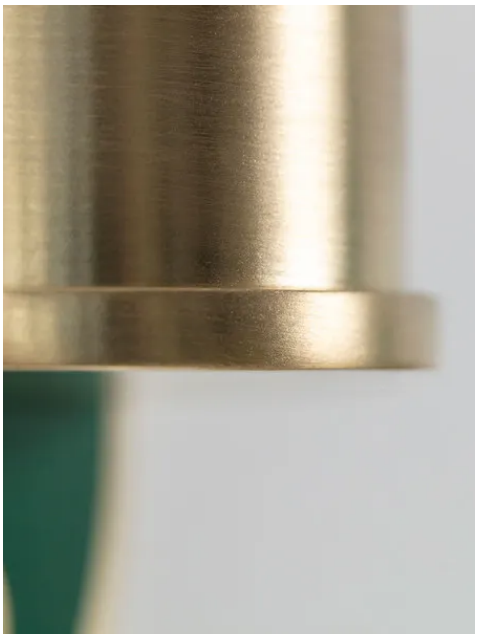

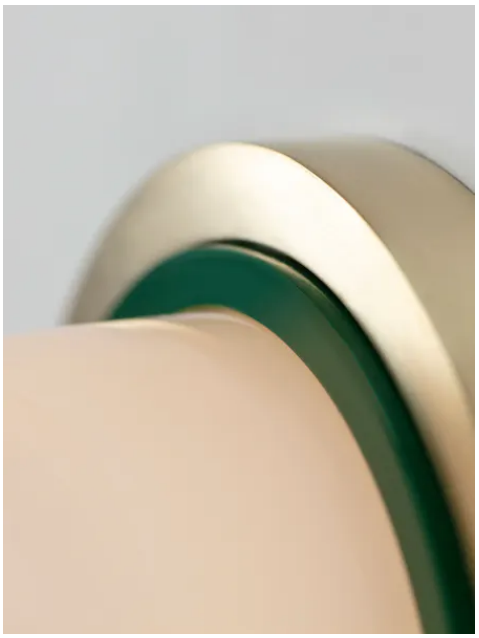

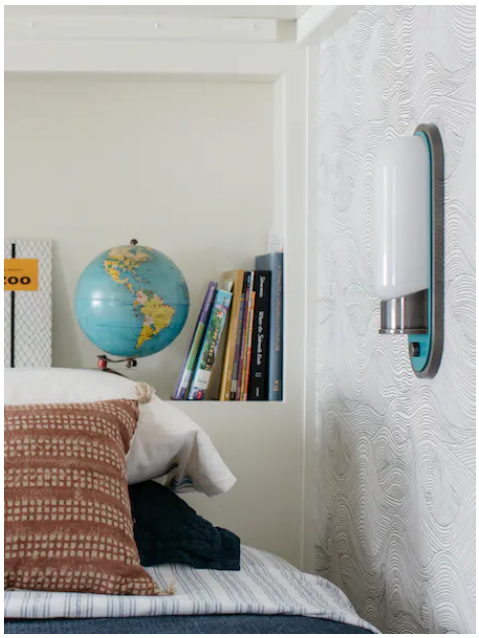

BUBBLE

WALL REGULAR

MA-1848WR

DIMENSIONS

Width	4.5in
Height	12.75in
Depth	2.75in
X	3in

MOUNTING

Recommended Installers	1
Weight	6lbs
Backplate	4.5in x 12.75in
Junction Box	4in oct/rnd

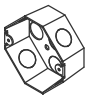

LAMP / WIRING

Ships with complimentary LED panel

RATING

Suitable for DAMP locations

UL Listed

ADA compliant

ADA COMPLIANT

PATENTS

This fixture is Patented with the United States Patent and Trademark Office. Patent No. D891,674 July 28, 2020

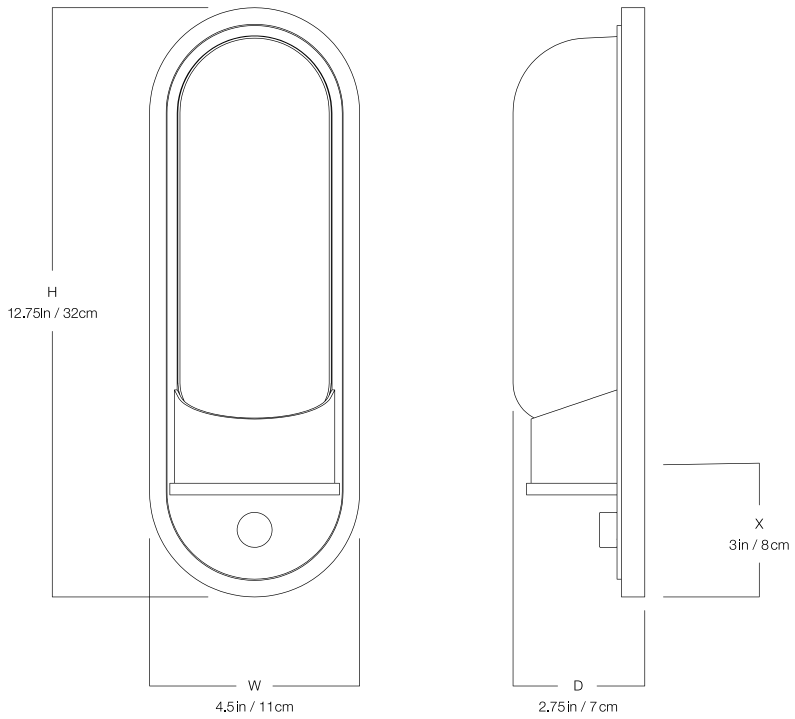

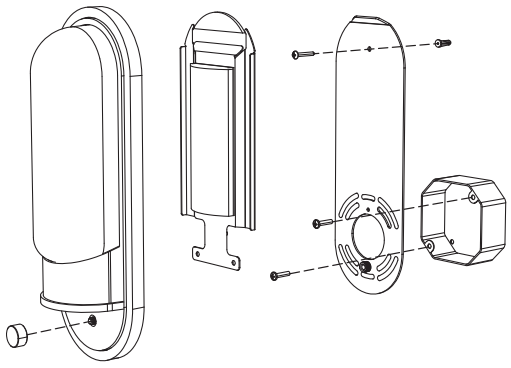

© 2024 The Urban Electric Co.

BUBBLE

WALL LARGE

MA-1848WL

DIMENSIONS

Width	4.5in
Height	22in
Depth	3in
X	10.75in

MOUNTING

Recommended Installers	2
Weight	8lbs
Backplate	4.5in x 22in
Junction Box	4in oct/rnd

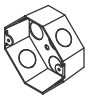

LAMP / WIRING

Ships with complimentary LED panel

RATING

Suitable for DAMP locations

UL Listed

ADA compliant

ADA COMPLIANT

PATENTS

This fixture is Patented with the United States Patent and Trademark Office. Patent No. D891,674 July 28, 2020

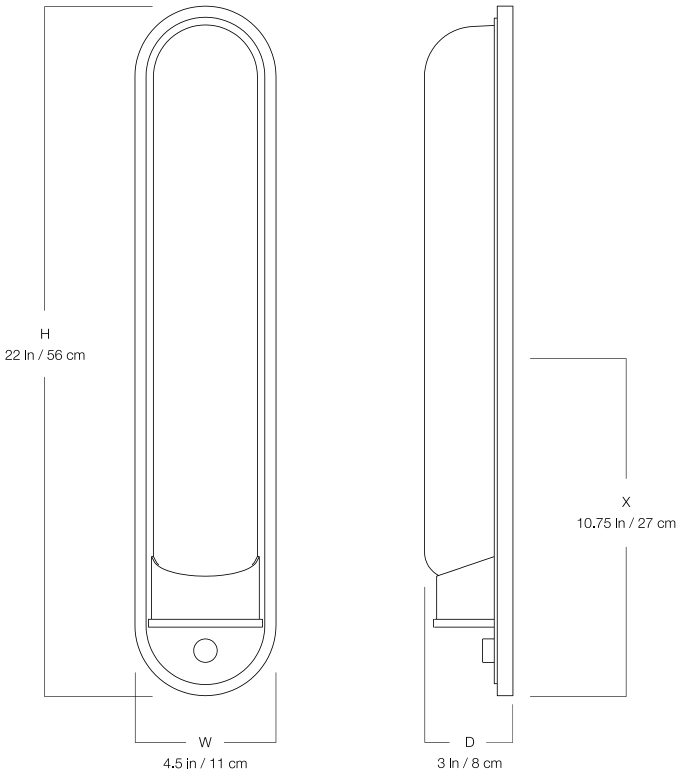

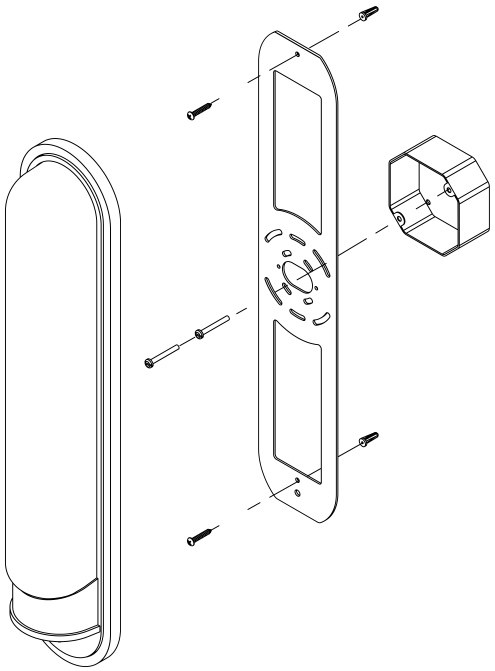

© 2024 The Urban Electric Co.