THE URBAN ELECTRIC Co.

HOCKNEY

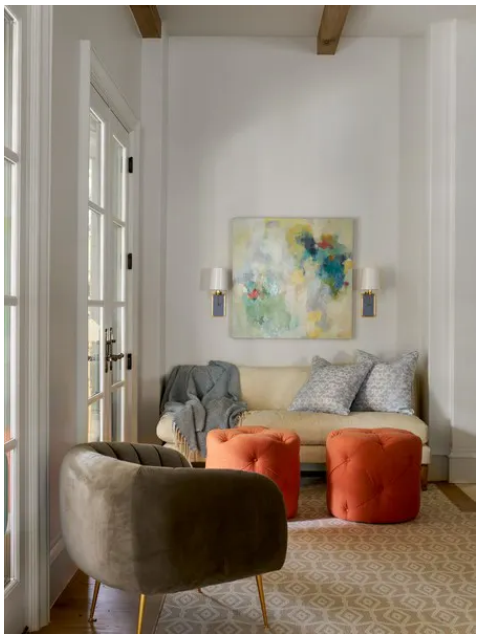

HOCKNEY

WALL REGULAR

MA-1675WR

DIMENSIONS

Width	5.5in
Height	14.75in
Depth	7.25in
X	3.5in
Y	7in
Z	5in

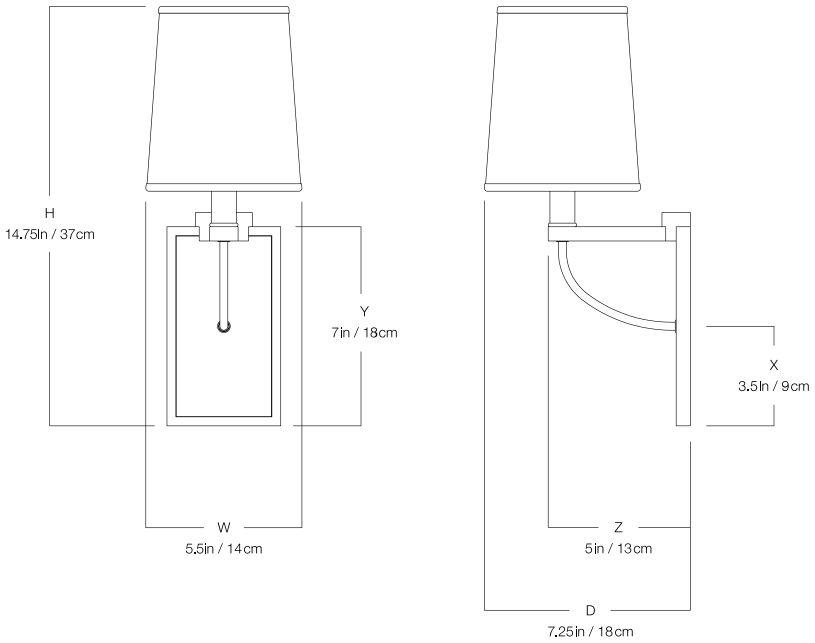

MOUNTING

Recommended Installers	1
Weight	4lbs
Backplate	4in x 7in
Junction Box	2in x 4in rect

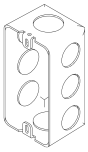

LAMP / WIRING

Max Wattage	(1) 60W C

Ships with complimentary LED bulb

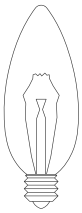

RATING

Suitable for DAMP locations

UL Listed

PATENTS

This fixture is Patented with the United States Patent and Trademark Office. Patent No. D826,459 August 21, 2018

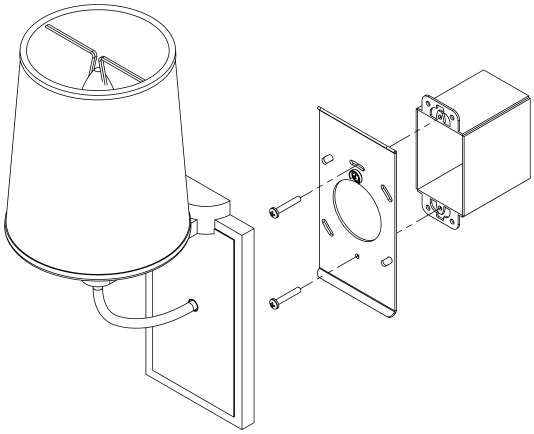

© 2024 The Urban Electric Co.